IF WORK ORDER CALLS FOR A UPTN0XXX PART NUMBER, THEN MARK PER UDA00716

IF WORK ORDER CALLS FOR A UFUN0XXX PART NUMBER, THEN MARK PER UDA00694

WITH 1 PHASE A.C. INPUT:

INPUT: AC ⑩PH ①V ②Hz. ⑪A

OUTPUT: AC③PH ⑦V ⑧ Hz. ⑫A

OR

WITH 3 PHASE A.C. INPUT

INPUT: AC③PH ①V ②Hz. ④A

OUTPUT: AC③PH ⑦V ⑧Hz. ⑨A

SCCR: ⑤ kA rms sym.,⑥ V max.

SUITABLE FOR USE AS SERVICE EQUIPMENT

Designator	Rating	Type
F1, F2 F6 F7		
F3, F4, F5		

Serial No.: ⑬

Model No.: ⑭

Type.: ⑮

W.D.: ⑯

Inst. Manual.: ⑰

YASKAWA

FIGURE 1

SUMMARY OF PAGES		
PRODUCT	SEE PAGES	INFO
Q1M3Axxx, Q1M3Bxxx	1 TABLE 1	WITHOUT OPTION P2 AND WITHOUT OPTION PR
Q1M3Axxx, Q1M3Bxxx	1 TABLE 2	WITHOUT OPTION P2 AND WITH OPTION PR
Q1M3Axxx, Q1M3Bxxx	2	WITH OPTION P2
Q1M3Hxxx	3	WITHOUT OPTION P2

TABLE 1 (**WITHOUT OPTION P2, AND WITHOUT OPTION PR**)

WORK ORDER PART NO. BEGINNING	①	②	③	④	⑤	⑥	⑦	⑧	⑨	⑩	⑪	⑫	⑬	⑭	⑮	⑯	⑰
Q1M3A006	240	50/60	3	7.6	31	240	0-230	0-60	6	1	7.6	4.9	AS APPLIES	WORK ORDER P/N	IQPUMPMICRO CONFIGURED	WORK ORDER SCHEM. NO.	TOEPYAIQPM02
Q1M3A010	240	50/60	3	11.1	31	240	0-230	0-60	9.6	1	11.1	6.8	AS APPLIES	WORK ORDER P/N	IQPUMPMICRO CONFIGURED	WORK ORDER SCHEM. NO.	TOEPYAIQPM02
Q1M3A012	240	50/60	3	14.2	31	240	0-230	0-60	12	1	14.2	7.5	AS APPLIES	WORK ORDER P/N	IQPUMPMICRO CONFIGURED	WORK ORDER SCHEM. NO.	TOEPYAIQPM02
Q1M3A020	240	50/60	3	24.3	31	240	0-230	0-60	19.6	1	24.3	9.7	AS APPLIES	WORK ORDER P/N	IQPUMPMICRO CONFIGURED	WORK ORDER SCHEM. NO.	TOEPYAIQPM02
Q1M3A030	240	50/60	3	37.3	31	240	0-230	0-60	30	1	37.3	7.5	AS APPLIES	WORK ORDER P/N	IQPUMPMICRO CONFIGURED	WORK ORDER SCHEM. NO.	TOEPYAIQPM02
Q1M3A040	240	50/60	3	52.3	31	240	0-230	0-60	40	1	52.3	16.7	AS APPLIES	WORK ORDER P/N	IQPUMPMICRO CONFIGURED	WORK ORDER SCHEM. NO.	TOEPYAIQPM02
Q1M3A056	240	50/60	3	68.3	31	240	0-230	0-60	56	1	68.3	23.4	AS APPLIES	WORK ORDER P/N	IQPUMPMICRO CONFIGURED	WORK ORDER SCHEM. NO.	TOEPYAIQPM02
Q1M3A069	240	50/60	3	80.3	31	240	0-230	0-60	69	1	80.3	25.8	AS APPLIES	WORK ORDER P/N	IQPUMPMICRO CONFIGURED	WORK ORDER SCHEM. NO.	TOEPYAIQPM02
Q1M3B002	480	50/60	3	2.3	31	480	0-460	0-60	2.1	1	2.3	1.3	AS APPLIES	WORK ORDER P/N	IQPUMPMICRO CONFIGURED	WORK ORDER SCHEM. NO.	TOEPYAIQPM02
Q1M3B004	480	50/60	3	4.5	31	480	0-460	0-60	4.1	1	4.5	2.4	AS APPLIES	WORK ORDER P/N	IQPUMPMICRO CONFIGURED	WORK ORDER SCHEM. NO.	TOEPYAIQPM02
Q1M3B005	480	50/60	3	6.1	31	480	0-460	0-60	5.4	1	6.1	3.5	AS APPLIES	WORK ORDER P/N	IQPUMPMICRO CONFIGURED	WORK ORDER SCHEM. NO.	TOEPYAIQPM02
Q1M3B007	480	50/60	3	8.3	31	480	0-460	0-60	6.9	1	8.3	3.5	AS APPLIES	WORK ORDER P/N	IQPUMPMICRO CONFIGURED	WORK ORDER SCHEM. NO.	TOEPYAIQPM02
Q1M3B009	480	50/60	3	9.6	31	480	0-460	0-60	8.8	1	9.6	5.1	AS APPLIES	WORK ORDER P/N	IQPUMPMICRO CONFIGURED	WORK ORDER SCHEM. NO.	TOEPYAIQPM02
Q1M3B011	480	50/60	3	14.2	31	480	0-460	0-60	11.1	1	14.2	5.5	AS APPLIES	WORK ORDER P/N	IQPUMPMICRO CONFIGURED	WORK ORDER SCHEM. NO.	TOEPYAIQPM02
Q1M3B018	480	50/60	3	20.2	31	480	0-460	0-60	17.5	1	20.2	4.5	AS APPLIES	WORK ORDER P/N	IQPUMPMICRO CONFIGURED	WORK ORDER SCHEM. NO.	TOEPYAIQPM02
Q1M3B023	480	50/60	3	24.2	31	480	0-460	0-60	23	1	24.2	5.5	AS APPLIES	WORK ORDER P/N	IQPUMPMICRO CONFIGURED	WORK ORDER SCHEM. NO.	TOEPYAIQPM02
Q1M3B031	480	50/60	3	38.2	31	480	0-460	0-60	31	1	38.2	7.9	AS APPLIES	WORK ORDER P/N	IQPUMPMICRO CONFIGURED	WORK ORDER SCHEM. NO.	TOEPYAIQPM02
Q1M3B038	480	50/60	3	44.2	31	480	0-460	0-60	38	1	44.2	11.3	AS APPLIES	WORK ORDER P/N	IQPUMPMICRO CONFIGURED	WORK ORDER SCHEM. NO.	TOEPYAIQPM02

TABLE 2 (**WITHOUT OPTION P2, AND WITH OPTION PR**)

WORK ORDER PART NO. BEGINNING	①	②	③	④	⑤	⑥	⑦	⑧	⑨	⑩	⑪	⑫	⑬	⑭	⑮	⑯	⑰
Q1M3A006	240	50/60	3	7.6	31	240	0-230	0-60	6	1	7.6	4.9	AS APPLIES	WORK ORDER P/N	IQPUMPMICRO CONFIGURED	WORK ORDER SCHEM. NO.	TOEPYAIQPM02
Q1M3A010	240	50/60	3	11.1	31	240	0-230	0-60	9.6	1	11.1	6.8	AS APPLIES	WORK ORDER P/N	IQPUMPMICRO CONFIGURED	WORK ORDER SCHEM. NO.	TOEPYAIQPM02
Q1M3A012	240	50/60	3	14.2	31	240	0-230	0-60	12	1	14.2	7.5	AS APPLIES	WORK ORDER P/N	IQPUMPMICRO CONFIGURED	WORK ORDER SCHEM. NO.	TOEPYAIQPM02
Q1M3A020	240	50/60	3	24.3	31	240	0-230	0-60	19.6	1	24.3	12.3	AS APPLIES	WORK ORDER P/N	IQPUMPMICRO CONFIGURED	WORK ORDER SCHEM. NO.	TOEPYAIQPM02
Q1M3A030	240	50/60	3	37.3	31	240	0-230	0-60	30	1	37.3	15.2	AS APPLIES	WORK ORDER P/N	IQPUMPMICRO CONFIGURED	WORK ORDER SCHEM. NO.	TOEPYAIQPM02
Q1M3A040	240	50/60	3	52.3	31	240	0-230	0-60	40	1	52.3	21	AS APPLIES	WORK ORDER P/N	IQPUMPMICRO CONFIGURED	WORK ORDER SCHEM. NO.	TOEPYAIQPM02
Q1M3A056	240	50/60	3	68.3	31	240	0-230	0-60	56	1	68.3	27.7	AS APPLIES	WORK ORDER P/N	IQPUMPMICRO CONFIGURED	WORK ORDER SCHEM. NO.	TOEPYAIQPM02
Q1M3A069	240	50/60	3	80.3	31	240	0-230	0-60	69	1	80.3	30.8	AS APPLIES	WORK ORDER P/N	IQPUMPMICRO CONFIGURED	WORK ORDER SCHEM. NO.	TOEPYAIQPM02
Q1M3B002	480	50/60	3	2.3	31	480	0-460	0-60	2.1	1	2.3	1.7	AS APPLIES	WORK ORDER P/N	IQPUMPMICRO CONFIGURED	WORK ORDER SCHEM. NO.	TOEPYAIQPM02
Q1M3B004	480	50/60	3	4.5	31	480	0-460	0-60	4.1	1	4.5	2.8	AS APPLIES	WORK ORDER P/N	IQPUMPMICRO CONFIGURED	WORK ORDER SCHEM. NO.	TOEPYAIQPM02
Q1M3B005	480	50/60	3	6.1	31	480	0-460	0-60	5.4	1	6.1	3.9	AS APPLIES	WORK ORDER P/N	IQPUMPMICRO CONFIGURED	WORK ORDER SCHEM. NO.	TOEPYAIQPM02
Q1M3B007	480	50/60	3	8.3	31	480	0-460	0-60	6.9	1	8.3	5.4	AS APPLIES	WORK ORDER P/N	IQPUMPMICRO CONFIGURED	WORK ORDER SCHEM. NO.	TOEPYAIQPM02
Q1M3B009	480	50/60	3	9.6	31	480	0-460	0-60	8.8	1	9.6	5.5	AS APPLIES	WORK ORDER P/N	IQPUMPMICRO CONFIGURED	WORK ORDER SCHEM. NO.	TOEPYAIQPM02
Q1M3B011	480	50/60	3	14.2	31	480	0-460	0-60	11.1	1	14.2	7.5	AS APPLIES	WORK ORDER P/N	IQPUMPMICRO CONFIGURED	WORK ORDER SCHEM. NO.	TOEPYAIQPM02
Q1M3B018	480	50/60	3	20.2	31	480	0-460	0-60	17.5	1	20.2	8.7	AS APPLIES	WORK ORDER P/N	IQPUMPMICRO CONFIGURED	WORK ORDER SCHEM. NO.	TOEPYAIQPM02
Q1M3B023	480	50/60	3	24.2	31	480	0-460	0-60	23	1	24.2	10.5	AS APPLIES	WORK ORDER P/N	IQPUMPMICRO CONFIGURED	WORK ORDER SCHEM. NO.	TOEPYAIQPM02
Q1M3B031	480	50/60	3	38.2	31	480	0-460	0-60	31	1	38.2	13.5	AS APPLIES	WORK ORDER P/N	IQPUMPMICRO CONFIGURED	WORK ORDER SCHEM. NO.	TOEPYAIQPM02
Q1M3B038	480	50/60	3	44.2	31	480	0-460	0-60	38	1	44.2	16.1	AS APPLIES	WORK ORDER P/N	IQPUMPMICRO CONFIGURED	WORK ORDER SCHEM. NO.	TOEPYAIQPM02

REVISIONS

REV.	DESCRIPTION	ECO #	DRAWN BY	DATE
00	INITIAL RELEASE	-	DRC	11/7/14

YASKAWA™

THIS DOCUMENT AND INFORMATION CONTAINED IN IT ARE CONFIDENTIAL, AND CANNOT BE COPIED OR DISCLOSED IN WHOLE OR IN PART WITHOUT THE EXPRESS WRITTEN CONSENT OF YASKAWA AMERICA INC.

DRAWN BY: D.R. CMELAK	DATE: 11/7/14	TITLE: AC DRIVE DATA NAMEPLATE FORMAT FOR IQPUMPMICRO CONFIGURED		
CHECKED: D. PACKER	DATE: 11/7/14			
TECH:	DATE:			
APPROVED: K. FLIERL	DATE: 11/7/14	SIZE: C	REVISION: 00	PAGE: 1 of 3
ORIGINAL DESIGN: D.R. CMELAK	DATE: 11/7/14	DRAWING #: UDA00993		

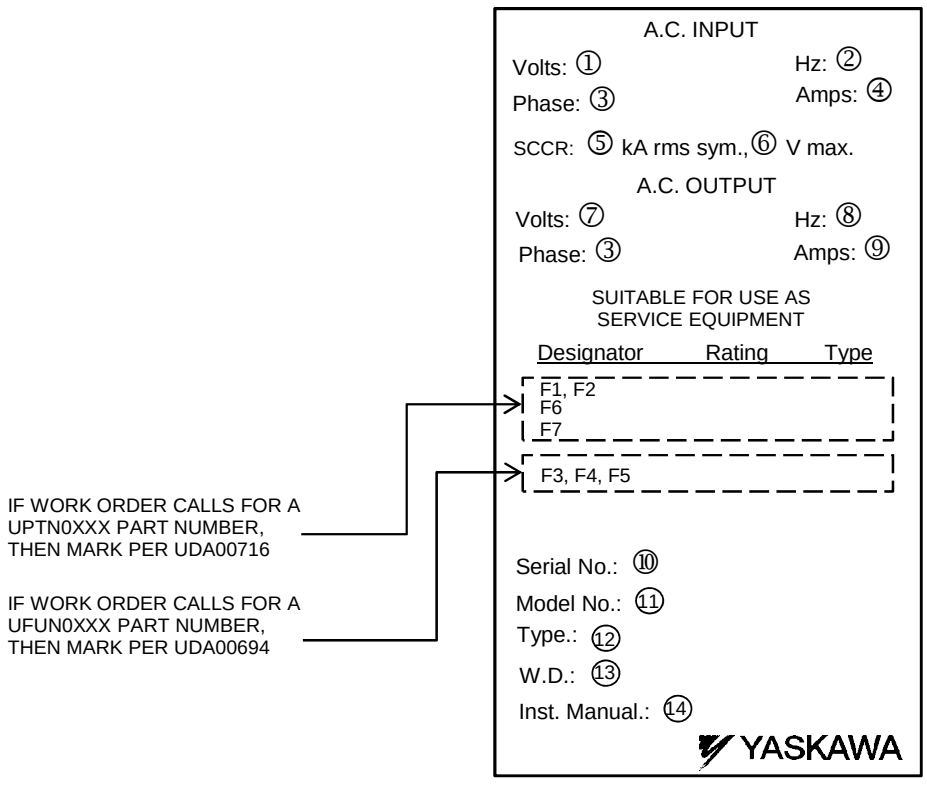

FIGURE 2

TABLE 3 (**WITH OPTION P2**)

WORK ORDER PART NO. BEGINNING	①	②	③	④	⑤	⑥	⑦	⑧	⑨	⑩	⑪	⑫	⑬	⑭
Q1M3A006	240	50/60	3	7.6	31	240	0-230	0-60	6	AS APPLIES	WORK ORDER P/N	IQPUMPMICRO CONFIGURED	WORK ORDER SCHEM. NO.	TOEPYAIQPM02
Q1M3A010	240	50/60	3	11.1	31	240	0-230	0-60	9.6	AS APPLIES	WORK ORDER P/N	IQPUMPMICRO CONFIGURED	WORK ORDER SCHEM. NO.	TOEPYAIQPM02
Q1M3A012	240	50/60	3	14.2	31	240	0-230	0-60	12	AS APPLIES	WORK ORDER P/N	IQPUMPMICRO CONFIGURED	WORK ORDER SCHEM. NO.	TOEPYAIQPM02
Q1M3A020	240	50/60	3	24.3	31	240	0-230	0-60	19.6	AS APPLIES	WORK ORDER P/N	IQPUMPMICRO CONFIGURED	WORK ORDER SCHEM. NO.	TOEPYAIQPM02
Q1M3A030	240	50/60	3	37.3	31	240	0-230	0-60	30	AS APPLIES	WORK ORDER P/N	IQPUMPMICRO CONFIGURED	WORK ORDER SCHEM. NO.	TOEPYAIQPM02
Q1M3A040	240	50/60	3	52.3	31	240	0-230	0-60	40	AS APPLIES	WORK ORDER P/N	IQPUMPMICRO CONFIGURED	WORK ORDER SCHEM. NO.	TOEPYAIQPM02
Q1M3A056	240	50/60	3	68.3	31	240	0-230	0-60	56	AS APPLIES	WORK ORDER P/N	IQPUMPMICRO CONFIGURED	WORK ORDER SCHEM. NO.	TOEPYAIQPM02
Q1M3A069	240	50/60	3	80.3	31	240	0-230	0-60	69	AS APPLIES	WORK ORDER P/N	IQPUMPMICRO CONFIGURED	WORK ORDER SCHEM. NO.	TOEPYAIQPM02
Q1M3B002	480	50/60	3	2.3	31	480	0-460	0-60	2.1	AS APPLIES	WORK ORDER P/N	IQPUMPMICRO CONFIGURED	WORK ORDER SCHEM. NO.	TOEPYAIQPM02
Q1M3B004	480	50/60	3	4.5	31	480	0-460	0-60	4.1	AS APPLIES	WORK ORDER P/N	IQPUMPMICRO CONFIGURED	WORK ORDER SCHEM. NO.	TOEPYAIQPM02
Q1M3B005	480	50/60	3	6.1	31	480	0-460	0-60	5.4	AS APPLIES	WORK ORDER P/N	IQPUMPMICRO CONFIGURED	WORK ORDER SCHEM. NO.	TOEPYAIQPM02
Q1M3B007	480	50/60	3	8.3	31	480	0-460	0-60	6.9	AS APPLIES	WORK ORDER P/N	IQPUMPMICRO CONFIGURED	WORK ORDER SCHEM. NO.	TOEPYAIQPM02
Q1M3B009	480	50/60	3	9.6	31	480	0-460	0-60	8.8	AS APPLIES	WORK ORDER P/N	IQPUMPMICRO CONFIGURED	WORK ORDER SCHEM. NO.	TOEPYAIQPM02
Q1M3B011	480	50/60	3	14.2	31	480	0-460	0-60	11.1	AS APPLIES	WORK ORDER P/N	IQPUMPMICRO CONFIGURED	WORK ORDER SCHEM. NO.	TOEPYAIQPM02
Q1M3B018	480	50/60	3	20.2	31	480	0-460	0-60	17.5	AS APPLIES	WORK ORDER P/N	IQPUMPMICRO CONFIGURED	WORK ORDER SCHEM. NO.	TOEPYAIQPM02
Q1M3B023	480	50/60	3	24.2	31	480	0-460	0-60	23	AS APPLIES	WORK ORDER P/N	IQPUMPMICRO CONFIGURED	WORK ORDER SCHEM. NO.	TOEPYAIQPM02
Q1M3B031	480	50/60	3	38.2	31	480	0-460	0-60	31	AS APPLIES	WORK ORDER P/N	IQPUMPMICRO CONFIGURED	WORK ORDER SCHEM. NO.	TOEPYAIQPM02
Q1M3B038	480	50/60	3	44.2	31	480	0-460	0-60	38	AS APPLIES	WORK ORDER P/N	IQPUMPMICRO CONFIGURED	WORK ORDER SCHEM. NO.	TOEPYAIQPM02

REVISIONS

REV.	DESCRIPTION	ECO #	DRAWN BY	DATE
00	INITIAL RELEASE	-	DRC	11/7/14

YASKAWA™

THIS DOCUMENT AND INFORMATION CONTAINED IN IT ARE CONFIDENTIAL, AND CANNOT BE COPIED OR DISCLOSED IN WHOLE OR IN PART WITHOUT THE EXPRESS WRITTEN CONSENT OF YASKAWA AMERICA INC.

DRAWN BY: D.R. CMELAK	**DATE:** 11/7/14	**TITLE:** AC DRIVE DATA NAMEPLATE FORMAT FOR IQPUMPMICRO CONFIGURED		
CHECKED: D. PACKER	**DATE:** 11/7/14			
TECH:	**DATE:**			
APPROVED: K. FLIERL	**DATE:** 11/7/14	**SIZE:** C	**REVISION:** 00	**PAGE:** 2 of 3
ORIGINAL DESIGN: D.R. CMELAK	**DATE:** 11/7/14	**DRAWING #:** UDA00993		

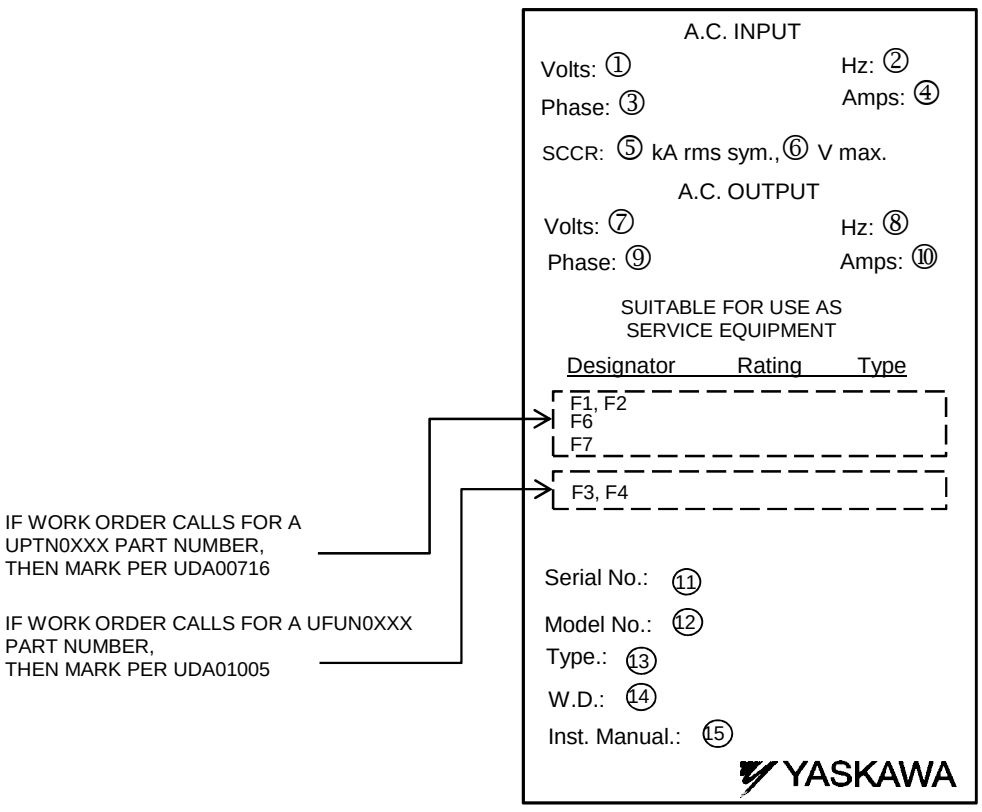

FIGURE 3

TABLE 4 (**WITHOUT OPTION P2**)

WORK ORDER PART NO. BEGINNING	①	②	③	④	⑤	⑥	⑦	⑧	⑨	⑩	⑪	⑫	⑬	⑭	⑮
Q1M3H006	240	50/60	1	14.1	31	240	0-230	0-60	3	6	AS APPLIES	WORK ORDER P/N	IQPUMPMICRO CONFIGURED	WORK ORDER SCHEM. NO.	TOEPYAIQPM02
Q1M3H010	240	50/60	1	20.5	31	240	0-230	0-60	3	9.6	AS APPLIES	WORK ORDER P/N	IQPUMPMICRO CONFIGURED	WORK ORDER SCHEM. NO.	TOEPYAIQPM02
Q1M3H012	240	50/60	1	24.3	31	240	0-230	0-60	3	12	AS APPLIES	WORK ORDER P/N	IQPUMPMICRO CONFIGURED	WORK ORDER SCHEM. NO.	TOEPYAIQPM02
Q1M3H018	240	50/60	1	35.3	31	240	0-230	0-60	3	17.5	AS APPLIES	WORK ORDER P/N	IQPUMPMICRO CONFIGURED	WORK ORDER SCHEM. NO.	TOEPYAIQPM02

REVISIONS

REV.	DESCRIPTION	ECO #	DRAWN BY	DATE
00	INITIAL RELEASE	-	DRC	11/7/14

YASKAWA™

THIS DOCUMENT AND INFORMATION CONTAINED IN IT ARE CONFIDENTIAL, AND CANNOT BE COPIED OR DISCLOSED IN WHOLE OR IN PART WITHOUT THE EXPRESS WRITTEN CONSENT OF YASKAWA AMERICA INC.

DRAWN BY: D.R. CMELAK	**DATE:** 11/7/14	**TITLE:** AC DRIVE DATA NAMEPLATE FORMAT FOR IQPUMPMICRO CONFIGURED		
CHECKED: D. PACKER	**DATE:** 11/7/14			
TECH:	**DATE:**			
APPROVED: K. FLIERL	**DATE:** 11/7/14	**SIZE:** C	**REVISION:** 00	**PAGE:** 3 of 3
ORIGINAL DESIGN: D.R. CMELAK	**DATE:** 11/7/14	**DRAWING #:** UDA00993		